KN6+ DUAL FUEL

Category II or Category IV Appliance
(see Installation and Operation Manual for venting information)

CODE OPTIONS

CSD-1	STANDARD

INDOOR UNIT

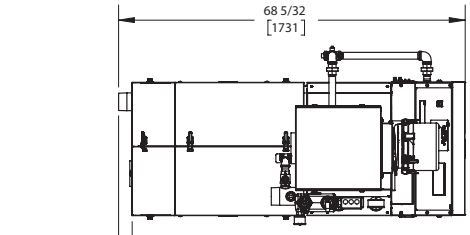

TOP VIEW
ASUB-00055_B

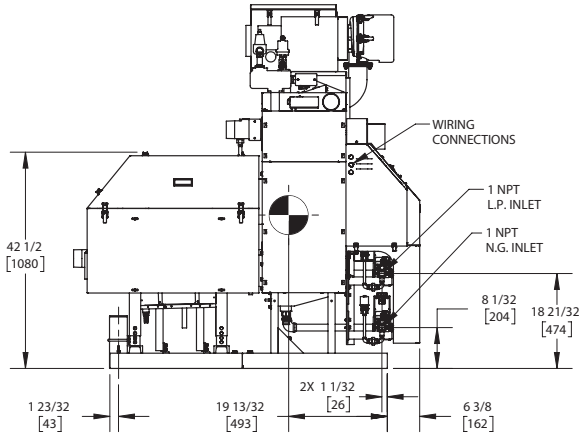

SIDE VIEW
ASUB-00055_B

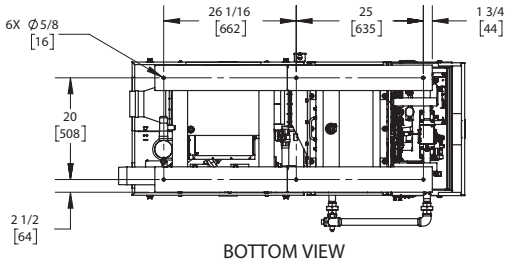

BOTTOM VIEW
ASUB-00055_B

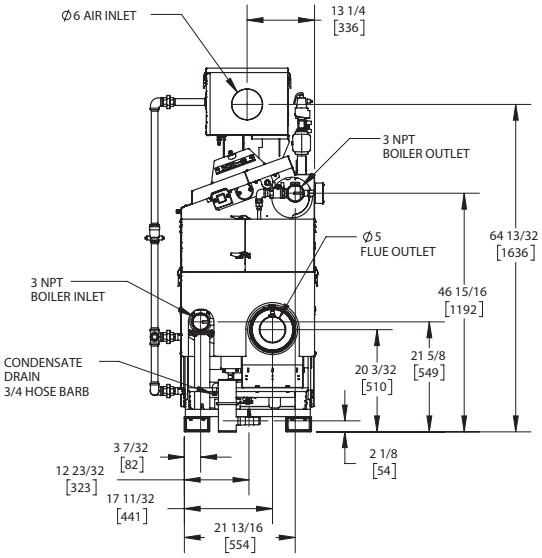

REAR VIEW
ASUB-00055_B

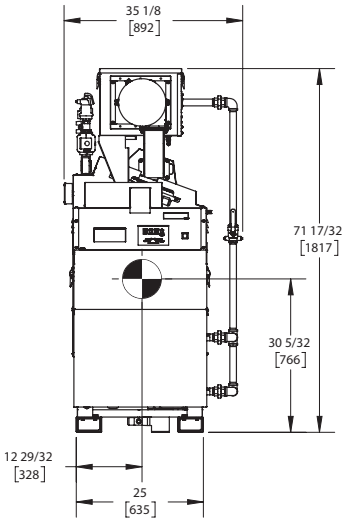

FRONT VIEW
ASUB-00055_B

NOTES:

1.- ⊕ - SYMBOL INDICATES CENTER OF GRAVITY.

2. DIMENSIONS ARE NOMINAL AND SUBJECT TO MANUFACTURING VARIATION AND SHOULD NOT BE USED FOR "ROUGHING IN".

3. ALL DIMENSIONS ARE INCHES [mm].

MADE IN THE USA

A.G.A. CERTIFIED RATINGS & CAPACITIES

Fuel Type	Natural/LP Gas	**Boiler FLA**	13.9 A*
Input BTU/hr.	600,000 / 176 KW	**Min. Gas Pressure Required**	3" W.C.
Output BTU/hr.	576,600 / 169 KW	**Max. Gas Pressure Allowed**	14" W.C.
Boiler HP	17.2	**Water Volume**	10.5 gal.
Electrical Requirements	120VAC/ 60 hz/ 1PH	**Operating Weight**	1485 lbs. / 674 kg.
SCCR Rating	5kA		

BOILER TRIM & CONTROLS

Main Gas Valve	Dungs MBC	**Air Switch**	Huba
Firing Valve	1" Apollo	**Flow Sensor**	SIKA
Ignition Control	Honeywell RM7895C	**Blocked Flue Switch**	Cleveland NS2
Operating Control	HeatNet®	**Blower Motor**	Ametek
High Limit	Honeywell L4006E	**L.W.C.O.**	800
Main Ball Valve	1" Apollo	**Relief Valve**	30, 50, 75 & 100 PSI
Pilot Cock	1/4" Conbraco	**Pilot Regulator**	Maxitrol RV12LT

A.S.M.E.

ASME Sect IV Fire Side Htg Surface	26.60 Sq. Ft. / 2.47 Sq. M.	**Design Data**	100 PSI & 250°F
ASME Sect IV Water Side Htg Surface	28.44 Sq. Ft. / 2.64 Sq. M.		
CV. GPM (1PSID)	62		

*Add circulator amps.

TEMPERATURE RISE / PRESSURE DROP (Based on Full Input)

20°F / 11.1°C				40°F / 22.2°C				60°F / 33.3°C				80°F / 44.4°C				100°F / 55.5°C			
Flow Rate		Pressure Drop		Flow Rate		Pressure Drop		Flow Rate		Pressure Drop		Flow Rate		Pressure Drop		Flow Rate		Pressure Drop	
GPM	L/s	Ft	kPa	GPM	L/s	Ft	kPa	GPM	L/s	Ft	kPa	GPM	L/s	Ft	kPa	GPM	L/s	Ft	kPa
57.7	3.64	2.00	5.97	28.8	1.82	.50	1.49	19.2	1.21	.22	.66	14.4	.91	.12	.37	11.5	.73	.08	.24

Flow GPM		Temp. Rise** (°F)		Vent Length (Equiv. Ft.)		Air Inlet Length (Equiv. Ft.)	
Min	Max	Min	Max	Min	Max	Min	Max
11.5	57.7	20	100	6	100	0	100

**Min/Max delta t reflects boiler operation at full input. For applications requiring operation above/below these parameters please consult factory.

REP FIRM _____

SUBMITTED BY _____

JOB NAME _____

ARCHITECT _____

ENGINEER _____

CONTRACTOR _____

DATE _____

KN6+ DUAL FUEL

Category II or Category IV Appliance

(see Installation and Operation Manual for venting information)

A Division of Mestek, Inc.
Westfield, MA 01085
(413) 564-5515

KN10+ DUAL FUEL

Category II or Category IV Appliance
(see Installation and Operation Manual for venting information)

CODE OPTIONS

CSD-1	STANDARD

INDOOR UNIT

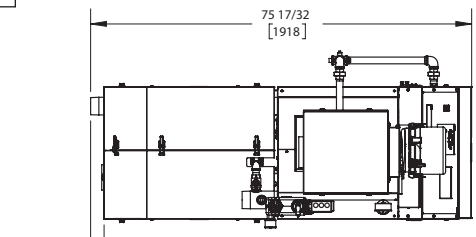

TOP VIEW
ASUB-00056_B

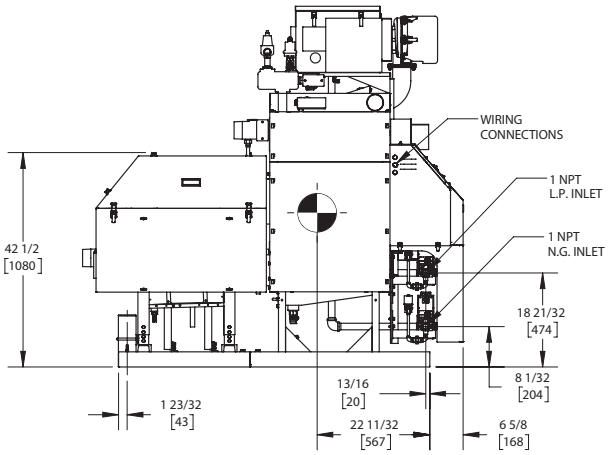

SIDE VIEW
ASUB-00056_B

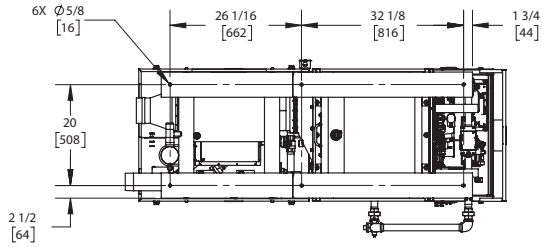

BOTTOM VIEW
ASUB-00056_B

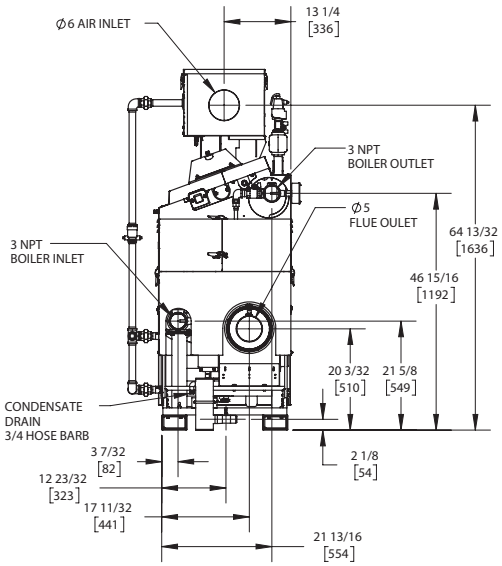

REAR VIEW
ASUB-00056_B

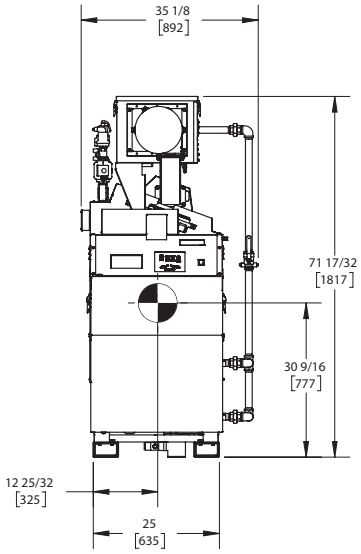

FRONT VIEW
ASUB-00056_B

NOTES:

1.- ⊕ - SYMBOL INDICATES CENTER OF GRAVITY.
2. DIMENSIONS ARE NOMINAL AND SUBJECT TO MANUFACTURING VARIATION AND SHOULD NOT BE USED FOR "ROUGHING IN".
3. ALL DIMENSIONS ARE INCHES [mm].

MADE IN THE USA

A.G.A. CERTIFIED RATINGS & CAPACITIES

Fuel Type	Natural/LP Gas	**Boiler FLA**	13.9 A*
Input BTU/hr.	1,000,000 / 293 KW	**Min. Gas Pressure Required**	3" W.C.
Output BTU/hr.	952,000 / 279 KW	**Max. Gas Pressure Allowed**	14" W.C.
Boiler HP	28.4	**Water Volume**	14.5 gal.
Electrical Requirements	120VAC/ 60 hz/ 1PH	**Operating Weight**	1850 lbs. / 839 kg.
SCCR Rating	5kA		

BOILER TRIM & CONTROLS

Main Gas Valve	Dungs MBC	**Air Switch**	Huba
Firing Valve	1" Apollo	**Flow Sensor**	SIKA
Ignition Control	Honeywell RM7895C	**Blocked Flue Switch**	Cleveland NS2
Operating Control	HeatNet®	**Blower Motor**	Ametek
High Limit	Honeywell L4006E	**L.W.C.O.**	800
Main Ball Valve	1" Apollo	**Relief Valve**	30, 50, 75 & 100 PSI
Pilot Cock	1/4" Conbraco	**Pilot Regulator**	Maxitrol RV12LT

A.S.M.E.

ASME Sect IV Fire Side Htg Surface	39.89 Sq. Ft. / 3.71 Sq. M.	**Design Data**	100 PSI & 250°F
ASME Sect IV Water Side Htg Surface	42.65 Sq. Ft. / 3.96 Sq. M.		
CV. GPM (1PSID)	100		

*Add circulator amps.

TEMPERATURE RISE / PRESSURE DROP (Based on Full Input)

20°F / 11.1°C				40°F / 22.2°C				60°F / 33.3°C				80°F / 44.4°C				100°F / 55.5°C			
Flow Rate		Pressure Drop		Flow Rate		Pressure Drop		Flow Rate		Pressure Drop		Flow Rate		Pressure Drop		Flow Rate		Pressure Drop	
GPM	L/s	Ft	kPa	GPM	L/s	Ft	kPa	GPM	L/s	Ft	kPa	GPM	L/s	Ft	kPa	GPM	L/s	Ft	kPa
95.2	6.01	2.09	6.26	47.6	3.00	.52	1.56	31.7	2.00	.23	.70	23.8	1.50	.13	.39	19.0	1.20	.08	.25

Flow GPM		Temp. Rise** (°F)		Vent Length (Equiv. Ft.)		Air Inlet Length (Equiv. Ft.)	
Min	Max	Min	Max	Min	Max	Min	Max
19.0	95.2	20	100	6	100	0	100

**Min/Max delta t reflects boiler operation at full input. For applications requiring operation above/below these parameters please consult factory.

REP FIRM _____

SUBMITTED BY _____

JOB NAME _____

ARCHITECT _____

ENGINEER _____

CONTRACTOR _____

DATE _____

KN10+ DUAL FUEL

Category II or Category IV Appliance

(see Installation and Operation Manual for venting information)

A Division of Mestek, Inc.
Westfield, MA 01085
(413) 564-5515

KN16+ DUAL FUEL

Category II or Category IV Appliance
(see Installation and Operation Manual for venting information)

CODE OPTIONS

CSD-1	STANDARD

INDOOR UNIT

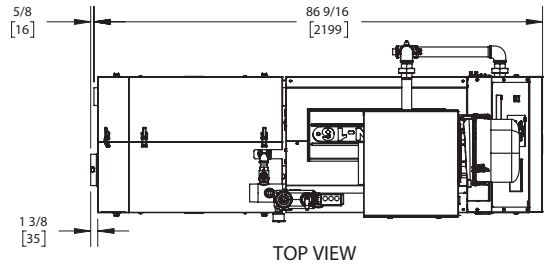

TOP VIEW
ASUB-00057_B

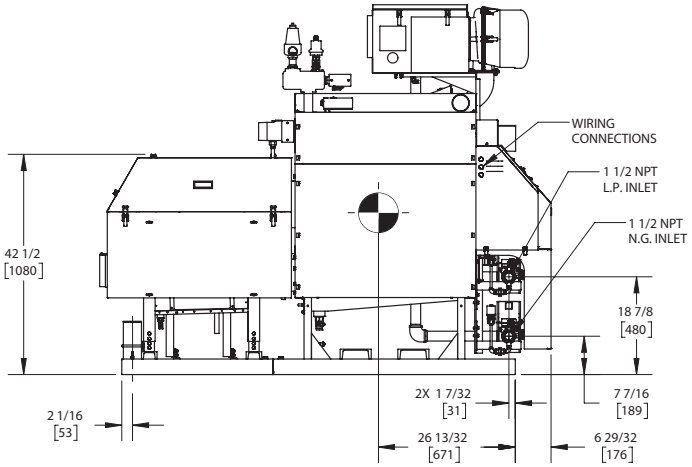

SIDE VIEW
ASUB-00057_B

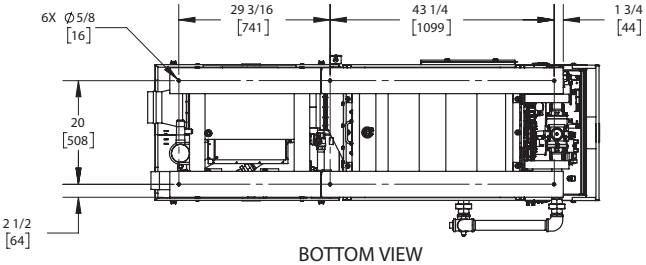

BOTTOM VIEW
ASUB-00057_B

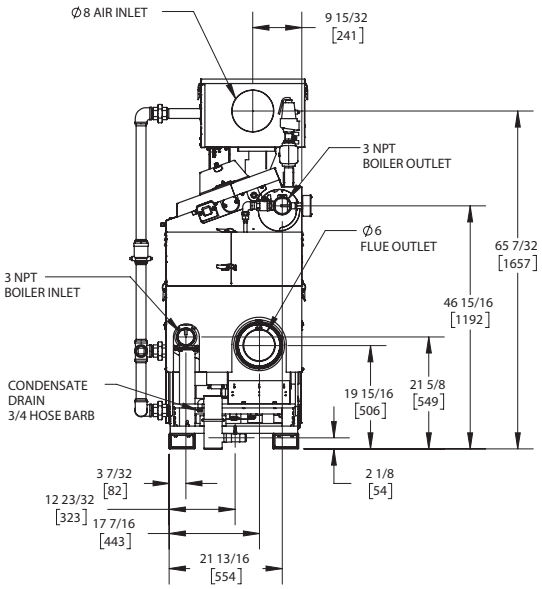

REAR VIEW
ASUB-00057_B

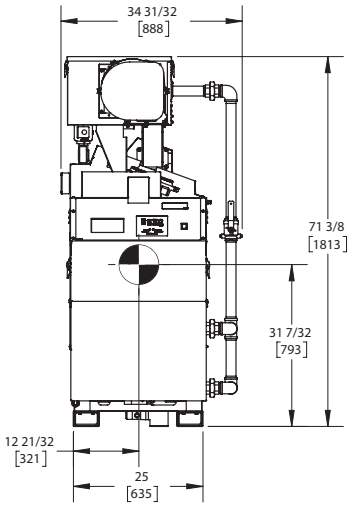

FRONT VIEW
ASUB-00057_B

NOTES:
1. ⊕ SYMBOL INDICATES CENTER OF GRAVITY.
2. DIMENSIONS ARE NOMINAL AND SUBJECT TO MANUFACTURING VARIATION AND SHOULD NOT BE USED FOR "ROUGHING IN".
3. ALL DIMENSIONS ARE INCHES [mm].

MADE IN THE USA

A.G.A. CERTIFIED RATINGS & CAPACITIES

Fuel Type	Natural/LP Gas	**Boiler FLA**	13.9 A*
Input BTU/hr.	1,600,000 / 469 KW	**Min. Gas Pressure Required**	3" W.C.
Output BTU/hr.	1,537,600 / 450 KW	**Max. Gas Pressure Allowed**	14" W.C.
Boiler HP	45.9	**Water Volume**	21.0 gal.
Electrical Requirements	230VAC/60 hz/1PH (with neutral)	**Operating Weight**	2690 lbs. / 1220 kg.
SCCR Rating	5kA		

BOILER TRIM & CONTROLS

Main Gas Valve	Dungs MBC	**Air Switch**	Huba
Firing Valve	1-1/2" Apollo	**Flow Sensor**	SIKA
Ignition Control	Honeywell RM7895C	**Blocked Flue Switch**	Cleveland NS2
Operating Control	HeatNet®	**Blower Motor**	Ametek
High Limit	Honeywell L4006E	**L.W.C.O.**	800
Main Ball Valve	1-1/2" Apollo	**Relief Valve**	30, 50, 75 & 100 PSI
Pilot Cock	1/4" Conbraco	**Pilot Regulator**	Maxitrol RV12LT

A.S.M.E.

ASME Sect IV Fire Side Htg Surface	59.84 Sq. Ft. / 5.56 Sq. M.	**Design Data**	100 PSI & 250°F
ASME Sect IV Water Side Htg Surface	63.98 Sq. Ft. / 5.94 Sq. M.		
CV. GPM (1PSID)	140		

*Add circulator amps.

TEMPERATURE RISE / PRESSURE DROP (Based on Full Input)

20°F / 11.1°C				40°F / 22.2°C				60°F / 33.3°C				80°F / 44.4°C				100°F / 55.5°C			
Flow Rate		Pressure Drop		Flow Rate		Pressure Drop		Flow Rate		Pressure Drop		Flow Rate		Pressure Drop		Flow Rate		Pressure Drop	
GPM	L/s	Ft	kPa	GPM	L/s	Ft	kPa	GPM	L/s	Ft	kPa	GPM	L/s	Ft	kPa	GPM	L/s	Ft	kPa
153.8	9.70	2.79	8.33	76.9	4.85	.70	2.08	51.3	3.23	.31	.93	38.5	2.43	.17	.52	30.8	1.94	.11	.33

Flow GPM		Temp. Rise** (°F)		Vent Length (Equiv. Ft.)		Air Inlet Length (Equiv. Ft.)	
Min	Max	Min	Max	Min	Max	Min	Max
30.8	153.8	20	100	6	100	0	100

**Min/Max delta t reflects boiler operation at full input. For applications requiring operation above/below these parameters please consult factory.

REP FIRM _____

SUBMITTED BY _____

JOB NAME _____

ARCHITECT _____

ENGINEER _____

CONTRACTOR _____

DATE _____

KN16+ DUAL FUEL

Category II or Category IV Appliance

(see Installation and Operation Manual for venting information)

A Division of Mestek, Inc.
Westfield, MA 01085
(413) 564-5515

KN20+ DUAL FUEL

Category II or Category IV Appliance
(see Installation and Operation Manual for venting information)

CODE OPTIONS

CSD-1	STANDARD

INDOOR UNIT

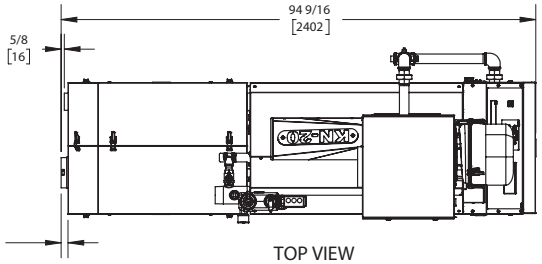

TOP VIEW
ASUB-00058_B

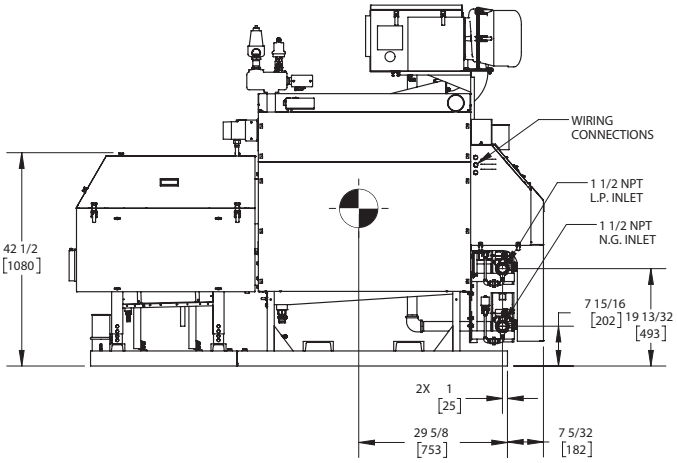

SIDE VIEW
ASUB-00058_B

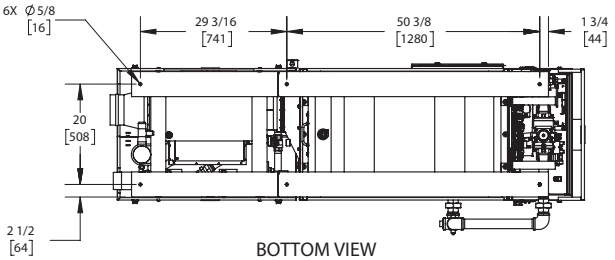

BOTTOM VIEW
ASUB-00058_B

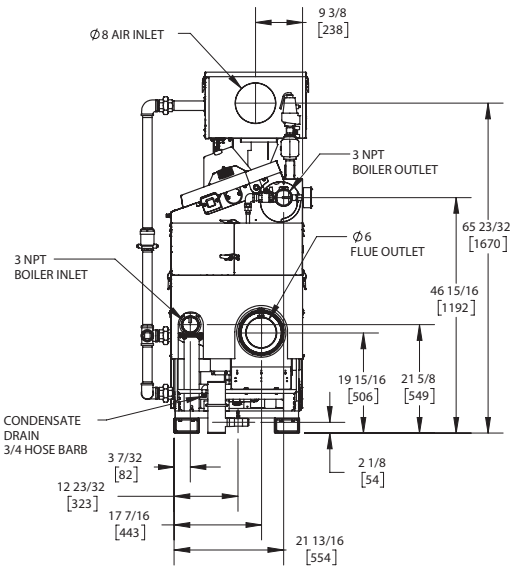

REAR VIEW
ASUB-00058_B

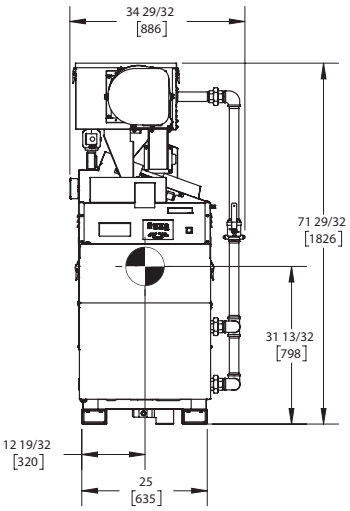

FRONT VIEW
ASUB-00058_B

NOTES:
1.- ⊕ - SYMBOL INDICATES CENTER OF GRAVITY.
2. DIMENSIONS ARE NOMINAL AND SUBJECT TO MANUFACTURING VARIATION AND SHOULD NOT BE USED FOR "ROUGHING IN".
3. ALL DIMENSIONS ARE INCHES [mm].

MADE IN THE USA

A.G.A. CERTIFIED RATINGS & CAPACITIES

Fuel Type	Natural/LP Gas	**Boiler FLA**	13.9 A*
Input BTU/hr.	2,000,000 / 586 KW	**Min. Gas Pressure Required**	3" W.C.
Output BTU/hr.	1,904,000 / 558 KW	**Max. Gas Pressure Allowed**	14" W.C.
Boiler HP	56.9	**Water Volume**	24.9 gal.
Electrical Requirements	230VAC/60 hz/1PH (with neutral)	**Operating Weight**	3040 lbs. / 1379 kg.
SCCR Rating	5kA		

BOILER TRIM & CONTROLS

Main Gas Valve	Dungs MBC	**Air Switch**	Huba
Firing Valve	1-1/2" Apollo	**Flow Sensor**	SIKA
Ignition Control	Honeywell RM7895C	**Blocked Flue Switch**	Cleveland NS2
Operating Control	HeatNet®	**Blower Motor**	Ametek
High Limit	Honeywell L4006E	**L.W.C.O.**	800
Main Ball Valve	1-1/2" Apollo	**Relief Valve**	30, 50, 75 & 100 PSI
Pilot Cock	1/4" Conbraco	**Pilot Regulator**	Maxitrol RV12LT

A.S.M.E.

ASME Sect IV Fire Side Htg Surface	73.14 Sq. Ft. / 6.80 Sq. M.	**Design Data**	100 PSI & 250°F
ASME Sect IV Water Side Htg Surface	78.20 Sq. Ft. / 7.26 Sq. M.		
CV. GPM (1PSID)	161		

*Add circulator amps.

TEMPERATURE RISE / PRESSURE DROP (Based on Full Input)

20°F / 11.1°C				40°F / 22.2°C				60°F / 33.3°C				80°F / 44.4°C				100°F / 55.5°C			
Flow Rate		Pressure Drop		Flow Rate		Pressure Drop		Flow Rate		Pressure Drop		Flow Rate		Pressure Drop		Flow Rate		Pressure Drop	
GPM	L/s	Ft	kPa	GPM	L/s	Ft	kPa	GPM	L/s	Ft	kPa	GPM	L/s	Ft	kPa	GPM	L/s	Ft	kPa
190.5	12.02	3.23	9.65	95.2	6.01	.81	2.41	63.5	4.01	.36	1.07	47.6	3.00	.20	.60	38.1	2.40	.13	.39

Flow GPM		Temp. Rise** (°F)		Vent Length (Equiv. Ft.)		Air Inlet Length (Equiv. Ft.)	
Min	Max	Min	Max	Min	Max	Min	Max
38.1	190.5	20	100	6	100	0	100

**Min/Max delta t reflects boiler operation at full input. For applications requiring operation above/below these parameters please consult factory.

REP FIRM _____

SUBMITTED BY _____

JOB NAME _____

ARCHITECT _____

ENGINEER _____

CONTRACTOR _____

DATE _____

KN20+ DUAL FUEL

Category II or Category IV Appliance

(see Installation and Operation Manual for venting information)

A Division of Mestek, Inc.
Westfield, MA 01085
(413) 564-5515

KN26+ DUAL FUEL

Category II or Category IV Appliance
(see Installation and Operation Manual for venting information)

CODE OPTIONS

CSD-1	STANDARD

INDOOR UNIT

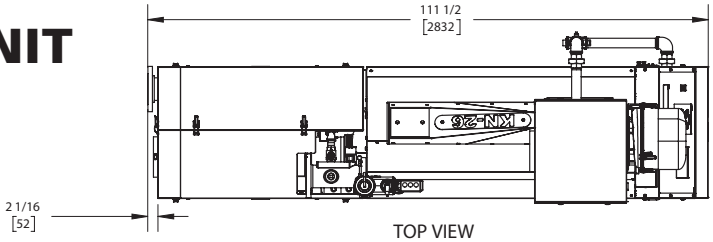

TOP VIEW
ASUB-00059_B

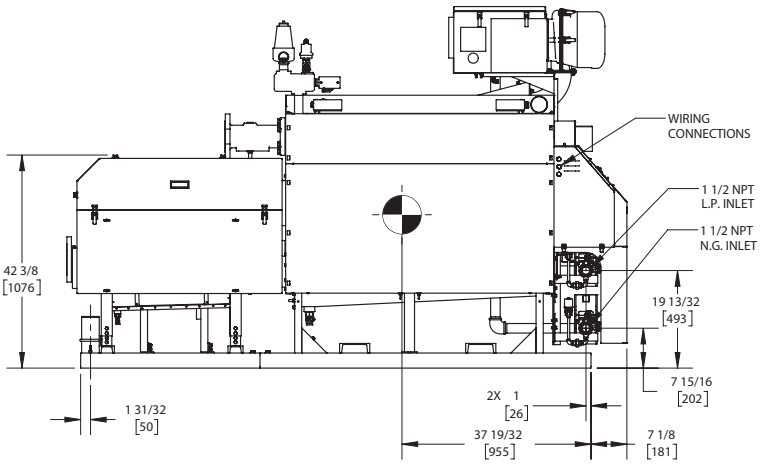

SIDE VIEW
ASUB-00059_B

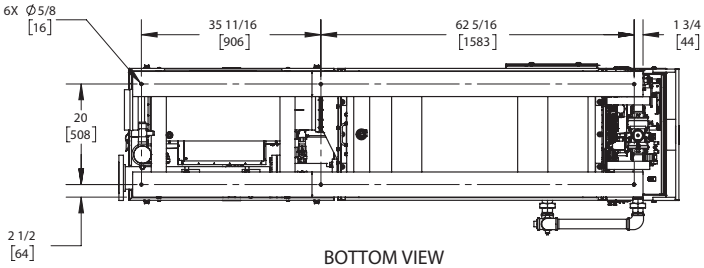

BOTTOM VIEW
ASUB-00059_B

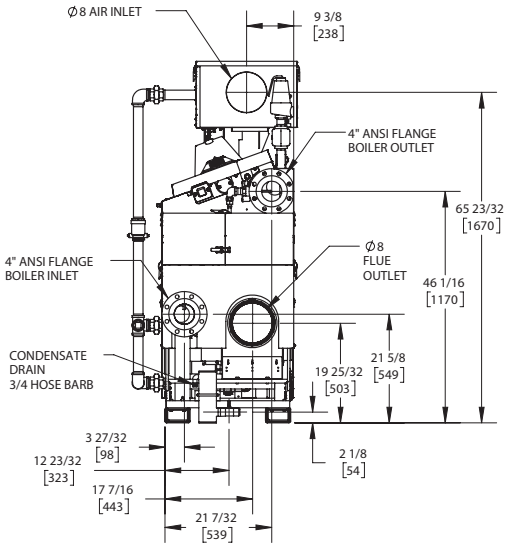

REAR VIEW
ASUB-00059_B

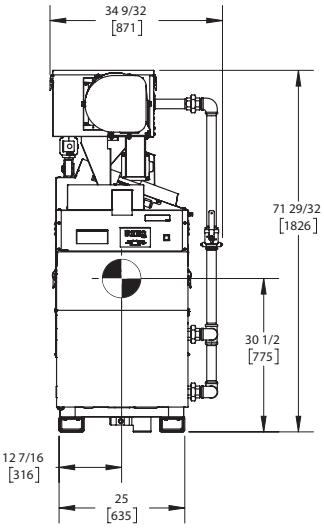

FRONT VIEW
ASUB-00059_B

NOTES:

1. - SYMBOL INDICATES CENTER OF GRAVITY.
2. DIMENSIONS ARE NOMINAL AND SUBJECT TO MANUFACTURING VARIATION AND SHOULD NOT BE USED FOR "ROUGHING IN".
3. ALL DIMENSIONS ARE INCHES [mm].

MADE IN THE USA

A.G.A. CERTIFIED RATINGS & CAPACITIES

Fuel Type	Natural/LP Gas	**Boiler FLA**	11.3 A*
Input BTU/hr.	2,600,000 / 762 KW	**Min. Gas Pressure Required**	3" W.C.
Output BTU/hr.	2,498,600 / 732 KW	**Max. Gas Pressure Allowed**	14" W.C.
Boiler HP	74.6	**Water Volume**	31.9 gal.
Electrical Requirements	230VAC/60 hz/3PH	**Operating Weight**	3840 lbs. / 1742 kg.
SCCR Rating	5kA		

BOILER TRIM & CONTROLS

Main Gas Valve	Dungs MBC	**Air Switch**	Huba
Firing Valve	1-1/2" Apollo	**Flow Sensor**	SIKA
Ignition Control	Honeywell RM7895C	**Blocked Flue Switch**	Cleveland NS2
Operating Control	HeatNet®	**Blower Motor**	Ametek
High Limit (Manual Reset)	Honeywell L4006E	**L.W.C.O.**	800
High Limit (Auto Reset)	Honeywell L4006A	**Relief Valve**	30, 50, 75 & 100 PSI
Main Ball Valve	1-1/2" Apollo	**Pilot Regulator**	Maxitrol RV12LT
Pilot Cock	1/4" Conbraco		

A.S.M.E.

ASME Sect IV Fire Side Htg Surface	93.08 Sq. Ft. / 8.65 Sq. M.	**Design Data**	100 PSI & 250°F
ASME Sect IV Water Side Htg Surface	99.53 Sq. Ft. / 9.25 Sq. M.		
CV. GPM (1PSID)	222		

*Add circulator amps.

TEMPERATURE RISE / PRESSURE DROP (Based on Full Input)

20°F / 11.1°C				40°F / 22.2°C				60°F / 33.3°C				80°F / 44.4°C				100°F / 55.5°C			
Flow Rate		Pressure Drop		Flow Rate		Pressure Drop		Flow Rate		Pressure Drop		Flow Rate		Pressure Drop		Flow Rate		Pressure Drop	
GPM	L/s	Ft	kPa	GPM	L/s	Ft	kPa	GPM	L/s	Ft	kPa	GPM	L/s	Ft	kPa	GPM	L/s	Ft	kPa
250.0	15.77	2.93	8.74	125.0	7.89	.73	2.19	83.3	5.26	.33	.97	62.5	3.94	.18	.55	50.0	3.15	.12	.35

Flow GPM		Temp. Rise** (°F)		Vent Length (Equiv. Ft.)		Air Inlet Length (Equiv. Ft.)	
Min	Max	Min	Max	Min	Max	Min	Max
50.0	250.0	20	100	6	100	0	100

**Min/Max delta t reflects boiler operation at full input. For applications requiring operation above/below these parameters please consult factory.

REP FIRM _____

SUBMITTED BY _____

JOB NAME _____

ARCHITECT _____

ENGINEER _____

CONTRACTOR _____

DATE _____

KN26+ DUAL FUEL

Category II or Category IV Appliance

(see Installation and Operation Manual for venting information)

A Division of Mestek, Inc.
Westfield, MA 01085
(413) 564-5515

KN30+ DUAL FUEL

Category II or Category IV Appliance
(see Installation and Operation Manual for venting information)

CODE OPTIONS

CSD-1	STANDARD

INDOOR UNIT

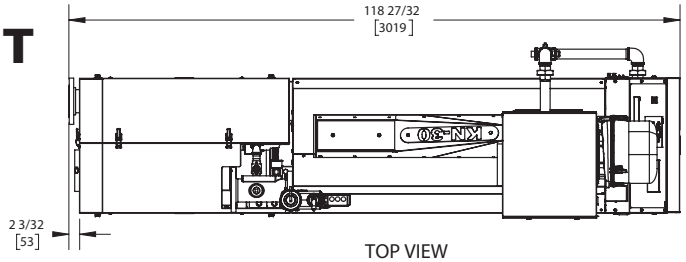

TOP VIEW
ASUB-00060_B

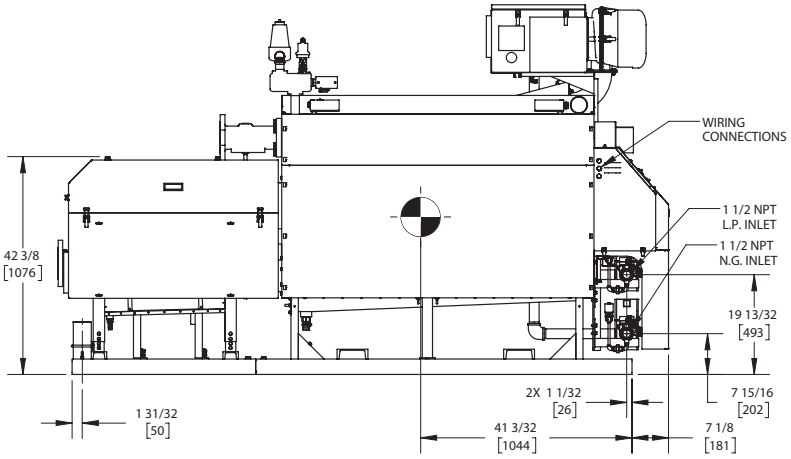

REAR VIEW
ASUB-00060_B

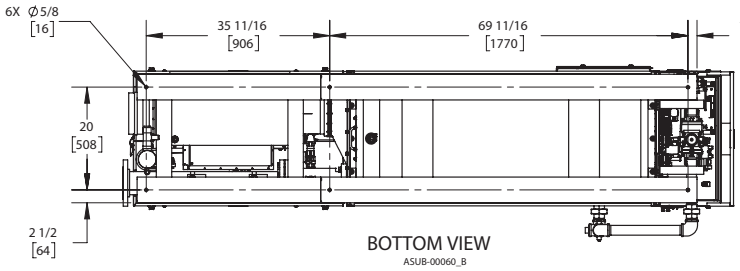

BOTTOM VIEW
ASUB-00060_B

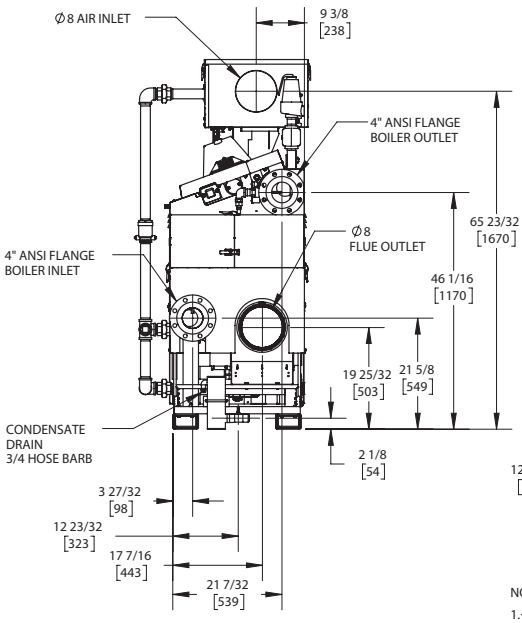

REAR VIEW
ASUB-00060_B

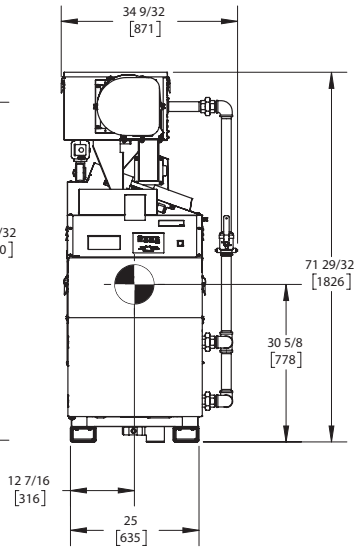

FRONT VIEW
ASUB-00060_B

NOTES:

1.- ⊕ - SYMBOL INDICATES CENTER OF GRAVITY.

2. DIMENSIONS ARE NOMINAL AND SUBJECT TO MANUFACTURING VARIATION AND SHOULD NOT BE USED FOR "ROUGHING IN".

3. ALL DIMENSIONS ARE INCHES [mm].

MADE IN THE USA

A.G.A. CERTIFIED RATINGS & CAPACITIES

Fuel Type	Natural/LP Gas	**Boiler FLA**	11.3 A*
Input BTU/hr.	3,000,000 / 879 KW	**Min. Gas Pressure Required**	3" W.C.
Output BTU/hr.	2,856,000 / 837 KW	**Max. Gas Pressure Allowed**	14" W.C.
Boiler HP	85.3	**Water Volume**	35.9 gal.
Electrical Requirements	230VAC/60 hz/3PH	**Operating Weight**	4250 lbs. / 1928 kg.
SCCR Rating	5kA		

BOILER TRIM & CONTROLS

Main Gas Valve	Dungs MBC	**Air Switch**	Huba
Firing Valve	1-1/2" Apollo	**Flow Sensor**	SIKA
Ignition Control	Honeywell RM7895C	**Blocked Flue Switch**	Cleveland NS2
Operating Control	HeatNet®	**Blower Motor**	Ametek
High Limit (Manual Reset)	Honeywell L4006E	**L.W.C.O.**	800
High Limit (Auto Reset)	Honeywell L4006A	**Relief Valve**	30, 50, 75 & 100 PSI
Main Ball Valve	1-1/2" Apollo	**Pilot Regulator**	Maxitrol RV12LT
Pilot Cock	1/4" Conbraco		

A.S.M.E.

ASME Sect IV Fire Side Htg Surface	106.38 Sq. Ft. / 9.88 Sq. M.	**Design Data**	100 PSI & 250°F
ASME Sect IV Water Side Htg Surface	113.74 Sq. Ft. / 10.57 Sq. M.		
CV. GPM (1PSID)	246		

*Add circulator amps.

TEMPERATURE RISE / PRESSURE DROP (Based on Full Input)

20°F / 11.1°C				40°F / 22.2°C				60°F / 33.3°C				80°F / 44.4°C				100°F / 55.5°C			
Flow Rate		Pressure Drop		Flow Rate		Pressure Drop		Flow Rate		Pressure Drop		Flow Rate		Pressure Drop		Flow Rate		Pressure Drop	
GPM	L/s	Ft	kPa	GPM	L/s	Ft	kPa	GPM	L/s	Ft	kPa	GPM	L/s	Ft	kPa	GPM	L/s	Ft	kPa
285.7	18.03	3.11	9.30	142.9	9.01	.78	2.33	95.2	6.01	.35	1.03	71.4	4.51	.19	.58	57.1	3.61	.12	.37

Flow GPM		Temp. Rise** (°F)		Vent Length (Equiv. Ft.)		Air Inlet Length (Equiv. Ft.)	
Min	Max	Min	Max	Min	Max	Min	Max
57.1	285.7	20	100	6	100	0	100

**Min/Max delta t reflects boiler operation at full input. For applications requiring operation above/below these parameters please consult factory.

REP FIRM _____

SUBMITTED BY _____

JOB NAME _____

ARCHITECT _____

ENGINEER _____

CONTRACTOR _____

DATE _____

KN30+ DUAL FUEL

Category II or Category IV Appliance

(see Installation and Operation Manual for venting information)

A Division of Mestek, Inc.
Westfield, MA 01085
(413) 564-5515

KN40+ DUAL FUEL

Category II or Category IV Appliance
(see Installation and Operation Manual for venting information)

CODE OPTIONS

CSD-1	STANDARD

INDOOR UNIT

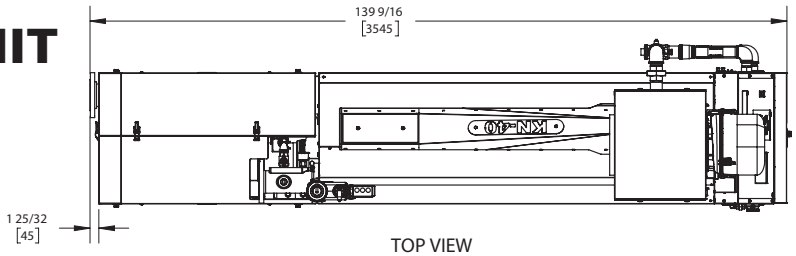

TOP VIEW
ASUB-00061_B

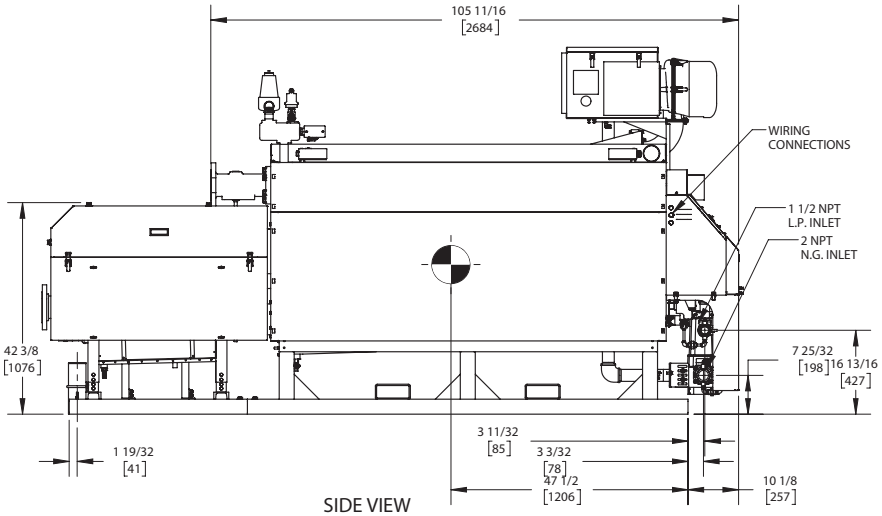

SIDE VIEW
ASUB-00061_B

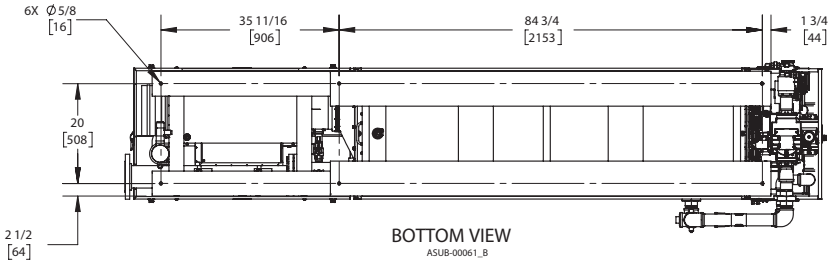

BOTTOM VIEW
ASUB-00061_B

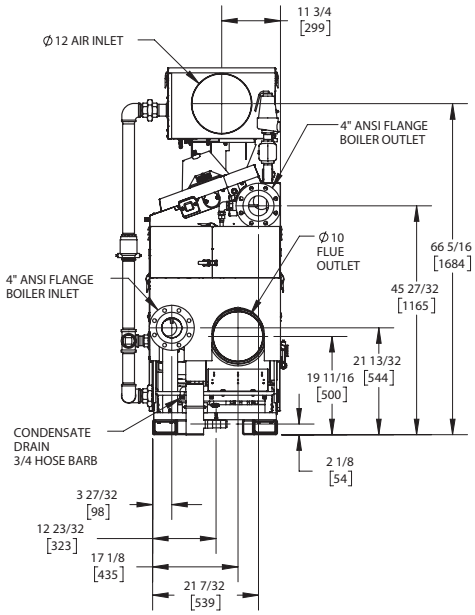

REAR VIEW
ASUB-00061_B

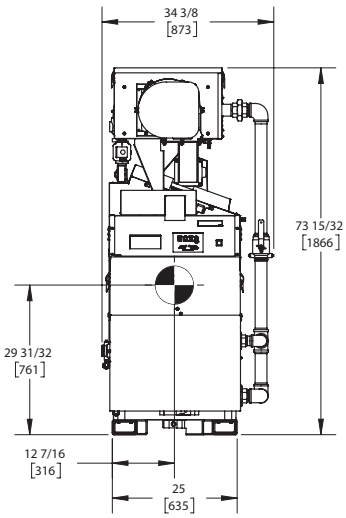

FRONT VIEW
ASUB-00061_B

NOTES:

1. SYMBOL INDICATES CENTER OF GRAVITY.
2. DIMENSIONS ARE NOMINAL AND SUBJECT TO MANUFACTURING VARIATION AND SHOULD NOT BE USED FOR "ROUGHING IN".
3. ALL DIMENSIONS ARE INCHES [mm].

MADE IN THE USA

A.G.A. CERTIFIED RATINGS & CAPACITIES

Fuel Type	Natural/LP Gas	**Boiler FLA**	17.0 A*
Input BTU/hr.	4,000,000 / 1172 KW	**Min. Gas Pressure Required**	3" W.C.
Output BTU/hr.	3,808,000 / 1116 KW	**Max. Gas Pressure Allowed**	14" W.C.
Boiler HP	113.8	**Water Volume**	47.1 gal.
Electrical Requirements	230VAC/60 hz/3PH	**Operating Weight**	5120 lbs. / 2322 kg.
SCCR Rating	5kA		

BOILER TRIM & CONTROLS

Main Gas Valve	Dungs MBC	**Air Switch**	Huba
Firing Valve	2" Apollo	**Flow Sensor**	SIKA
Ignition Control	Honeywell RM7895C	**Blocked Flue Switch**	Cleveland NS2
Operating Control	HeatNet®	**Blower Motor**	Ametek
High Limit (Manual Reset)	Honeywell L4006E	**L.W.C.O.**	800
High Limit (Auto Reset)	Honeywell L4006A	**Relief Valve**	30, 50, 75 & 100 PSI
Main Ball Valve	2" Apollo	**Pilot Regulator**	Maxitrol RV12LT
Pilot Cock	1/4" Conbraco		

A.S.M.E.

ASME Sect IV Fire Side Htg Surface	139.63 Sq. Ft. / 12.97 Sq. M.	**Design Data**	100 PSI & 250°F
ASME Sect IV Water Side Htg Surface	149.29 Sq. Ft. / 13.87 Sq. M.		
CV. GPM (1PSID)	271		

*Add circulator amps.

TEMPERATURE RISE / PRESSURE DROP (Based on Full Input)

20°F / 11.1°C				40°F / 22.2°C				60°F / 33.3°C				80°F / 44.4°C				100°F / 55.5°C			
Flow Rate		Pressure Drop		Flow Rate		Pressure Drop		Flow Rate		Pressure Drop		Flow Rate		Pressure Drop		Flow Rate		Pressure Drop	
GPM	L/s	Ft	kPa	GPM	L/s	Ft	kPa	GPM	L/s	Ft	kPa	GPM	L/s	Ft	kPa	GPM	L/s	Ft	kPa
381.0	24.03	4.56	13.63	190.5	12.02	1.14	3.41	127.0	8.01	.51	1.51	95.2	6.01	.28	.85	76.2	4.81	.18	.55

Flow GPM		Temp. Rise** (°F)		Vent Length (Equiv. Ft.)		Air Inlet Length (Equiv. Ft.)	
Min	Max	Min	Max	Min	Max	Min	Max
76.2	381.0	20	100	6	100	0	100

**Min/Max delta t reflects boiler operation at full input. For applications requiring operation above/below these parameters please consult factory.

REP FIRM _____

SUBMITTED BY _____

JOB NAME _____

ARCHITECT _____

ENGINEER _____

CONTRACTOR _____

DATE _____

KN40+ DUAL FUEL

Category II or Category IV Appliance

(see Installation and Operation Manual for venting information)

A Division of Mestek, Inc.
Westfield, MA 01085
(413) 564-5515